Design and Validation of Scalable Solar Home Systems for Energy Access in Rural Nano-Communities

Timo Dietrich
Stellenbosch University
Stellenbosch, South Africa
timo.dietrich@study.hs-duesseldorf.de

Dr. Clint Steed
Stellenbosch University
Stellenbosch, South Africa
steed@sun.ac.za

Prof. Joerg Niemann
Hochschule Duesseldorf
Duesseldorf, Germany
joerg.niemann@hs-duesseldorf.de

Claudia Fussenecker
Hochschule Duesseldorf
Duesseldorf, Germany
claudia.fussenecker@hs-duesseldorf.de

Abstract*—Many countries in Sub-Saharan Africa face major challenges with nationwide electricity supply, and many rural and informal nano-communities suffer from energy poverty. The social, economic, and health consequences are substantial. This paper proposes and develops a modular solar home system prototype to cover basic energy needs such as electric lighting and smartphone charging and to support increasing energy demand after initial electrification. A hybrid development approach using Design Thinking and the V-Model is applied and validated through field testing in remote nano-communities. Design Thinking is used to identify user needs and consider socio-economic factors, which are then translated into engineering requirements. These requirements guide prototyping, sizing calculations, and validation within the V-Model framework. The result is a development of three different low-voltage DC prototypes with either 12 V or 24 V, varying capacities and future-proof USB-C output with up to 65 W charging power. In contrast to conventional non-scalable solutions, the proposed modular structure enables incremental upgrades instead of full replacement, thereby extending system lifetime and reducing lifecycle costs. The proposed systems provide reliable basic electrification, while enabling scalable energy access. This supports small-scale income-generating activities such as mobile businesses, extends productive hours for education and work, and improves living conditions by avoiding light sources that are harmful to health and pose a fire hazard.

***Keywords* — Solar Home Systems (SHS), Low-Voltage DC (LVDC) Systems, Rural Electrification, Energy Access, Off-Grid Energy Solutions, V-Model Engineering**

I. Introduction

A. Background

Energy poverty remains a global problem. In 2023, 9.3 % of the world's population had no access to electricity [1]. Sub-Saharan Africa (SSA) is particularly affected, 85 % of all people worldwide who live without electricity come from SSA [2]. Access to electricity depends heavily on the type of settlement and socio-economic status. In urban regions, 94% of the population has access to electricity, while in rural areas the figure is only 45 %. Wealthy households are connected to the power grid at a rate of 84 %, which is about twice as high as the 43 % connection rate among households living in poverty [3].

The consequences of energy poverty are many fold. The use of candles or paraffin lamps for lighting cause a fire outbreak or emit harmful emissions that damage health [17]. In addition, energy poverty can lead to mental problems and limits social, political, and economic opportunities, as the time-consuming collection of biomass reduces productive activities and economic activities are limited by the daylight cycle [4].

A key challenge of widespread electrification is the cost-intensive expansion of the power grid in rural areas. Solar home systems (SHS), which use photovoltaic (PV) modules to generate electrical energy and store it in batteries, represent a promising alternative. The successful electrification of Bangladesh with the help of SHS shows that SHS can be a successful solution for the electrification of rural areas [5]. With over 4.1 million SHS installations, an electrification rate of 97 % was achieved there in 2021 increasing by 77 % since 2000 [6].

B. Objectives

Although there are already various SHS systems on the market, large-scale implementation trials such as the South Africa SHS Concession have shown that more is needed than technically functional systems [35]. In addition to the technology, user needs, socio-economic constraints, and financing models play a major role in achieving high user acceptance.This work aims to develop a cost-effective and scalable SHS for use in rural and informal settlements in SSA that not only meets technical requirements but is also perfectly tailored to user needs and socio-economic factors. This ensures user acceptance and long-term system use. The scope of this work is limited to the development of a prototype based on the identification of user requirements, the resulting technical specifications, the technical system design, and a cost analysis. The data obtained provides a solid foundation for addressing large-scale deployment in the future.

II. Contex and framework conditions

A. Socio-economic Conditions

SSA is particularly affected by poverty and pronounced income inequality. In 2024, 46 % of the population there lived in poverty [7]. Per capita gross national income (GNI) was US$1,597, well below the global average of US$13,443 [8]. A Gini coefficient of 0.44 (2020) also indicates significant income inequality [9]. The high proportion of the population living in rural areas (56 %) is structurally relevant, as the expansion of central power grids in these regions is often associated with high costs and is not very profitable [10]. The average household size is 4.8 people and varies between 3 and 8 people [11].

XXX-X-XXXX-XXXX-X/XX/$XX.00 ©20XX IEEE

After basic electrification which consists of electric lighting and smartphone charging, more appliances are purchased over time, and the energy demand is increasing. This increase is closely linked to changing socio-economic conditions, including improved access to education, information, communication and income generating activities [12, 29, 30].

B. Solar Potential in Sub-Saharan Africa

SSA has a high average annual global radiation; the practical daily average PV potential ranges from 3.5 $\frac{kWh}{kW_p}$ (Gabon) to 5.5 $\frac{kWh}{kW_p}$ (Namibia) [13]. This PV potential indicates how much electricity can be generated per day per installed module capacity. In addition, seasonal variability is low. The seasonality index is below 2 in all countries and around 1.4 in most, which suggests that yields are relatively constant throughout the year [13]. A factor of one would mean that PV yields would be identical every month. However, high ambient temperatures, dust deposits on the PV panel surface, and rainy seasons in some countries, are reducing the efficiency of the systems [13].

In summary, it can be said that SSA is extremely well suited for generating electricity using PV, as the annual yield is high and relatively even throughout the year [31].

III. Methodology and approach

This chapter presents the methodology used to develop a suitable SHS prototype for rural and informal settlements. The approach used is a combination of the V-model and design thinking. This combination was chosen because design thinking is important for understanding the multifaceted and complex problem as well as possible and for gaining a good understanding of user needs [20, 21]. This enables the development of a user-centered prototype. The V-model ensures a systematic and structured approach [19]. The performance requirements are clearly defined and are therefore easy to test and validate. The V-model helps to verify whether the system meets the defined requirements. A mixed development approach guarantees a prototype that is socially accepted by users and technically correctly scaled. Figure 1 illustrates the overall methodological framework and the combination between both approaches.

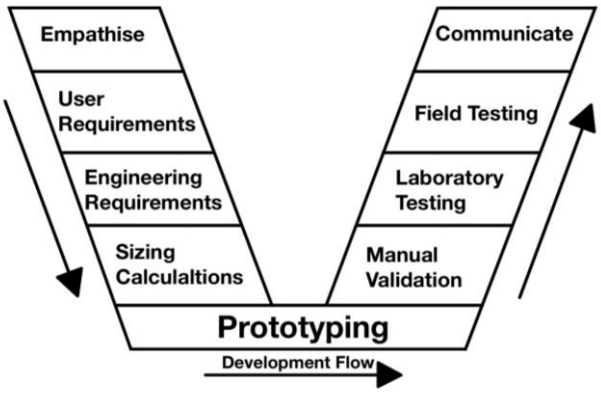

Fig. 1. V-Model with implemented Design Thinking

A. Empathise: Understand User Needs and Context

The focus in the empathise and user requirements phases is initially on developing a sound understanding of actual energy needs and the socio-economic and geographic conditions that influence the functioning and long-term success of a SHS in rural and informal settlements. In addition to quantitative energy requirements, solvency, user safety, maintenance competence, and the local availability of spare parts play a decisive role. It is essential to consider not only the current demand situation, but also the expected development after electrification. Experience from comparable contexts shows that energy demand increases significantly in the first few years after the introduction of an SHS, as additional electrical devices are purchased [12]. The user's affordability to pay for the use of a SHS is derived from previous studies and literature research [14]. This information is then used as an input parameter for the system design.

B. V-Model Engineering

Engineering requirements are systematically derived from the identified user needs, integrating both technical and economic aspects. These needs are then translated into measurable design criteria.

The system is dimensioned based on representative load profiles, obtained from previous studies [14], but this study also considers the future protected demand besides the initial energy demand. To determine future energy requirements, the energy consumption of electronic devices – which are most commonly purchased following the installation of basic electrical infrastructure – is added to the total demand. The sizing procedure includes the calculation of required PV-capacity, battery storage, and energy demand based on the used consumers. The calculations consider system losses and safety factors for non-ideal operating conditions.

Physical prototypes can be developed based on engineering requirements and sizing calculations. Whether the prototypes fulfil their purpose can be assessed and verified against the measurable design criteria established earlier.

C. Testing and Validating

Once the prototypes have been completed, a multi-stage validation process takes place. First, individual components are checked as part of manual validation. This involves measuring the electrical characteristics of the PV modules and comparing them with the expected performance data. The solar charge controller (SCC), as the central control unit of the system, is validated with regard to its protection and control functions, in particular with regard to undervoltage shutdown and load management. The functionality of the USB outputs is also checked under realistic load conditions.

In subsequent laboratory testing, the entire system is tested under combined charging and discharging loads. This involves examining whether all components work together reliably and whether the system operates within the permissible thermal limits even under higher loads. Only after these tests have been successfully completed are the prototypes installed in a selected community. A household receives the system, including verbal instructions on how to use it. After several weeks of use, structured interviews are conducted to gain insights into user acceptance, perceived reliability, and possible malfunctions.

D. Communicate to Iterate

The final step of the model consists of a structured communication and feedback loop. The goal is to turn a linear development process into an iterative learning process. Technical measurement results, observed deviations, and user feedback are systematically analyzed and compared with the

original assumptions. Not only symptoms, but also the causes of possible misconceptions or miscalculations are examined. The insights gained are incorporated into the further development of subsequent prototypes and enable continuous optimization in terms of technical robustness, cost-effectiveness, and user-friendliness.

IV. System Design and Comparison

Based on the engineering requirements, three prototype variants with different system voltages are being developed. Two 12 V systems with different load output options cover the initial demand, while a 24 V system allows easy upscaling, due to a possible upgrade path, as energy demand increases and enables the use of more appliances. All variants have a modular design. The first 12 V prototype only has a USB-A output, while the second version and the 24 V prototype feature USB Type A and USB Type C Power Delivery outputs, enabling flexible use for smartphones, tablets, and—in the case of the 24 V system—even more power-intensive devices such as laptops. Figure 2 shows the structure of the SHS prototypes.

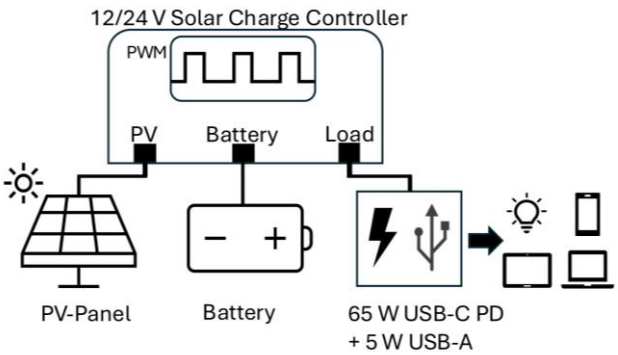

Fig. 2. Technical Sketch of the System

The general system consists of a SCC, a battery, a PV module, and a load interface. In addition, a closed housing concept is implemented. This system is a low voltage direct current (LVDC) system. An inverter and the use of alternating current (AC) have been deliberately omitted. The reason for this is that a LVDC system is simpler and meets the key requirement for a cost-effective system. Also, LVDC systems meet user needs better, because they are ideally suited to ensure a basic power supply. Another engineering requirement is to create a low-maintenance system that is easy to operate. The reason for this is that in rural communities, people often lack the knowledge required to operate the system correctly [15]. Furthermore, technicians capable of maintaining a device properly are rarely available. If a device is not properly maintained, its service life is reduced, which also diminishes its usefulness and increases the overall costs [15].

The correct sizing calculation is also important for a cost-effective system, because overscaling would cause unnecessarily high costs, while underscaling would not meet user needs and thus jeopardize the long-term usability of the system. Findings from previous studies show that the initial energy requirement is between 40 and 60 Wh to meet basic needs, such as electric lighting and charging a smartphone [12, 14]. Literature reviews indicate that, following successful basic electrification, users purchase and use additional devices, which will increase consumption [12]. Once these additional devices are in use, consumption will rise to over 100 Wh per day.

The PV module generates electricity from solar radiation. To cover the daily energy consumption of approximately 50 Wh, one PV module with 15 Wp is sufficient [14]. However, since the amount of energy generated deviates from the theoretical potential, a 50 Wp panel is selected. These losses are caused by lower efficiency than under Standard Test Conditions (STC) due to losses because of high ambient temperature, temporary shading, and dust on the PV module [25, 26]. It was also considered that there will be days when solar radiation is below the assumed average. In the 24 V system, two 50 Wp modules are connected in series to increase the yield and to supply a sufficiently high voltage, which is necessary to charge the battery (24 V). The PV modules are connected via MC4 connectors. Using those enables a simple, safe, fast, and reliable connection. In addition, they are weather-resistant, low-loss, and standardized, making them an excellent solution [22, 23].

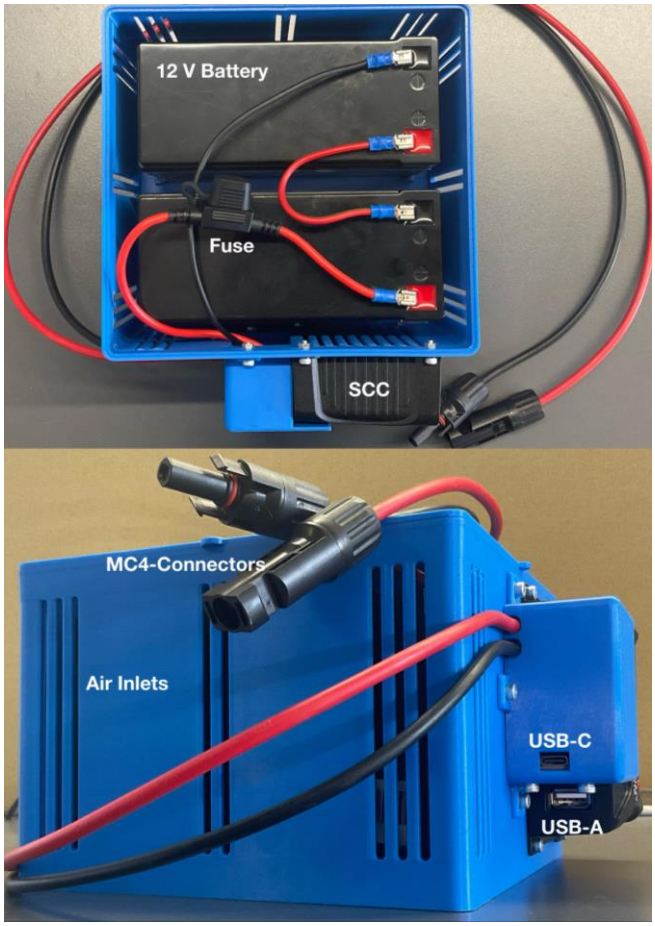

Fig. 3. 24 V Prototype

The housing containing the batteries, wiring, and SCC was manufactured using a 3D printer. Acrylonitrile butadiene styrene (ABS) was used as the material because ABS is mechanically robust, electrically non-conductive, and heat-resistant [28]. There are air inlets on the outside to prevent the batteries from overheating. In Figure 3 shows the concealed cable connections by the enclosure between the individual components and the SCC. This is to prevent the connection between components and the SCC from being disconnected or even users from receiving an electric shock. The interior of the housing has space for two batteries, and the USB Type-C port is also mounted in the housing. Two cables emerge from the

housing, allowing PV modules to be easily connected via MC4 connectors without having to open the housing. The housing is the same for both the 12 V and 24 V systems, which makes it easier, cheaper, and more sustainable to scale up to 24 V, as there is no need to purchase additional housing.

A battery is used to store electrical energy throughout the day. This increases the efficiency of the system, as it allows energy to be used even when the PV module is not generating energy, or electricity to be generated and stored even when no consumers are using it. Lithium Iron Phosphate $LiFePO_4$ batteries with a nominal voltage of 12 V are used for the prototypes. In the 24 V system, two batteries are connected in series to achieve a higher system voltage. Despite the higher cost of $LiFePO_4$ compared to other battery types (lead acid or lithium ion), it was chosen because it is very safe, has a high energy density, and has a long service life [14, 24, 27]. To meet daily requirements, previous studies determined a necessary capacity of 5.74 Ah [14]. The batteries used in these prototypes each have a capacity of 8 Ah. This buffer has several advantages. For example, it reduces the depth of discharge (DOD) because the usable capacity is greater. A lower DOD increases the service life of the battery, as the battery cells are subjected to less stress. In addition, this slight oversizing of the battery reduces dependence on PV yield. There is a fuse between the battery and the SCC to protect the battery and disconnect it from the system in the event of a short circuit.

Different load outputs are used to supply as many consumers as possible with power. The 5 W USB-A output located directly on the SCC can be used in all prototypes, while in the prototypes with USB-C it is possible to use the 65 W USB-C Power Delivery (PD) 3.0 output. The option of using USB-C PD offers various advantages. It enables fast charging for smartphones, tablets, and even laptops, is very energy-efficient, and is standard on many devices. USB-C is also future-proof, as it is a globally established charging port and is increasingly being used in all modern devices [16]. Furthermore, USB-C PD enables to output various voltages. The devices that are connected signal which voltage they require, and this is then made available to them. The 24 V system can output 5 V, 9 V, 12 V, 15 V, and 20 V, while the 12 V system can only output voltages up to 12 V. This means that the charging power of 65 W (3.25 A*20 V) can only be used in the 24 V system, while the maximum charging power in the 12 V system is 39 W (3.25 A*12 V). Table 1 shows the differences between USB-A and USB-C.

TABLE I. Device Charging via USB-A and USB-C

Device	***USB-A***	***USB-C***	
		12 V	***24 V***
LED Lighting	++	+	+
Portable Wifi Router	++	++	++
Smartphone	o	++	++
Tablet	--	+	++
Power Tools Battery	--	--	++
Laptop or Television	--	--	+

a. Charging performance rating: ++ (excellent), + (good), o (limited), -- (not supported)

Table 1 shows that USB-C can power significantly more devices than USB-A alone. The only advantage USB-A has over USB-C is that most charging cables for portable LED lighting are designed for a USB-A connection, which is why USB-C only gets a + in this category, even though it would be theoretically possible with the right cable. However, this also shows that the combination of USB-A and USB-C is very useful, as it allows you to charge LED lighting and, for example, a smartphone at the same time. The 24 V system with USB-C PD can reliably operate devices in various categories. Although a tablet can also be charged with 12 V, it would prefer a higher voltage, which the 24 V system can deliver compared to the 12 V system.

The SCC recognizes a system voltage of both 12 V and 24 V, making it ideal for this application. It operates at a maximum of 10 A, which is more than sufficient. This SCC works with pulse width modulation (PWM) and not maximum power point tracking (MPPT). The advantage of PWM is that it is significantly cheaper than MPPT and is ideal for simple small systems. The energy yield is slightly lower than with an MPPT controller, but this disadvantage is offset by the significantly lower cost. An advantage of the used SCC is that it has various limit values. For example, if the voltage drops too low, the load is disconnected to protect the battery from deep discharge. This ensures that the system functions without intervention and is still protected from system shutdown due to an excessively discharged battery.

To examine how different system sizes affect costs, the total costs were listed in a table. This table also provides information on the breakdown of each prototype. In addition, the total cost difference is equal to the upgrade cost to the desired prototype.

TABLE II. Price for each Prototype

Components	***12 V***		***12 V + USB-C***		***24 V + USB-C***	
	Amount	Total price	Amount	Total price	Amount	Total price
Battery	1	750	1	750	2	1500
PV panel	1	681	1	681	2	1362
SCC	1	247	1	247	1	247
Housing	1	507	1	507	1	507
Lights	1	105	1	105	1	105
Type-C	0	0	1	78	1	78
Cables	1	30	1	35	1	40
Fuse Holder	1	40	1	40	1	40
Fasteners	7	28	9	36	9	36
MC4+Fuse	1	20	1	20	1	20
Lugs	2	4	2	4	4	8
Total Costs per Unit	***R2412***		***R2503***		***R3943***	
Payback-Period	***12 months***		***13 months***		***20 months***	

a. All costs are in South African Rand (ZAR)

Table 2 shows that as expected, the 24 V prototype with R3943 is the most expensive, as it contains the most hardware. The 12 V prototype with USB-C output is the second most expensive at R2503. The simple 12 V system, which only includes a USB-A output, costs R2412 and is the cheapest. The upgrade path enables the opportunity to start with the low cost 12 V system and then upgrade to a more cost-effective system, when his energy demand outgrows the 12 V system. To finance the systems, users must pay monthly until the total cost of a system is covered. Once all installments are paid, the

system belongs to the users. Based on the results of previous work, users are willing to pay R200 per month to use an SHS [14]. Dividing the total cost by the monthly cost-payback determines the payback period. For the 12 V systems, this is approximately 13 months, while for the 24 V system it is appoximately 20 months.

V. Discussion

A. Suitability of the System for rural Electrification

Rural settlements often lack qualified personnel to properly maintain or repair electrical systems. It is therefore important that the prototypes developed are simple and robust. A LVDC system keeps that complexity to a minimum, and the system is less prone to faults. This makes the system very reliable and low maintenance. Many potential users do not have sufficient knowledge to control and use a complex SHS. User safety is therefore of great importance. The housing securely encloses the entire system, and there are no exposed electrical contacts. The USB ports are the only ones freely available to the user, allowing them to use electrical energy easily and safely. This design reduces the risk of incorrect operation and short circuits, which can be harmful to the system and dangerous for the user. Compliance with the pre-defined engineering requirements ensures that the service life is as long as possible.

B. Scalability and Energy Demand Growth

Studies show that after electrification, the demand for energy and more devices increases [12]. The first benefit after electrification is electric light, followed by the use of smartphones or even tablets. After some time, entertainment devices, Wi-Fi routers, or small household appliances are then used [12]. To keep costs down, a SHS is often undersized. If demand increases after some time, this system is no longer usable, and users must purchase another larger and more expensive system. The consequences are more electronic waste and possibly also frustration among users due to the short service life. This problem is solved by the step-by-step model of the SHS prototypes and the possibility of upgrading. Although the initial costs are slightly higher due to the oversized housing, it offers users the opportunity to use a sufficiently scaled system in a cost-effective and gradual manner, as the system grows with the user's energy needs and only the necessary components need to be purchased when upgrading. This ensures a longer service life.

C. Economic Accessibility

A major problem with the implementation of SHS in SSA is the solvency of users and the resulting affordability of SHS. Many households live in poverty and have low and irregular incomes [7, 9, 32, 33]. This makes high one-time payments problematic, as potential users rarely have sufficient savings to make them. There are two possible models for financing the system through users. One option is a pay-as-you-go (PAYG) model. In this model, users pay monthly for the energy they consume but never own the system. The advantage of this model is that users only pay for the energy they use, and the payments are therefore smaller. In addition, users only pay for as long as they need the SHS. The disadvantage is that it is more expensive in the long term than an ownership model. Also, a control unit would have to be installed throughout the system to count consumption, transmit it, and activate or block the use of electricity. The second option is an ownership model. Here, there are monthly payments and once the total cost of an SHS has been paid, the model belongs to the users. The advantage of this option is that it is cheaper in the long term than a PAYG-model, and the user no longer must make any payments after the payback period, as they own the system. The monthly payment is not an increase for users, but replaces energy expenses for candles, paraffin lamps, or batteries. They use the money they save to pay for the SHS, which means that, in addition to lighting, they can also benefit from other electrical appliances without necessarily having to pay more than before. The ownership model makes an SHS easily accessible and enables long-term ownership, which is why it was chosen as the payment method.

The Kenyan company M-Kopa is a perfect example of how successful electrification can be achieved through a user-tailored financing strategy. M-Kopa has successfully focused on expanding the use of SHS in various countries in SSA for people living in poverty [33, 34].

D. Sustainability and System Lifetime

An important aspect in today's world is sustainability, which was also taken into account in the developed prototypes. The component most affected by this is the battery. The use of a $LiFePO_4$ battery ensures a long service life due to its high cycle count. This means that the battery needs to be replaced much less frequently, which makes the system more sustainable and reduces overall costs. In addition, the modular and scalable design of the system increases its sustainability. Many systems can only be used until their capacity is no longer sufficient, or a component in the entire system breaks down. The upgrade path allows the system to be used for longer, as the user does not outgrow the system, and its modular design means that components can be replaced individually, making repairs cheaper and therefore more attractive. The upgrade path ensures less electronic waste, reparability, and scalability.

E. Limitations

This work is limited by several factors. First, the SHS developed is a prototype and not a finished series product that can be mass-produced. The costs determined are based on a single order and may decrease because of larger order quantities. Another limiting factor is the limited time available. This mainly includes the field-testing phase and evaluation of the results. The limited test phase does not provide reliable results, as it is too short to determine and evaluate battery degradation, seasonal PV differences, or long-term user acceptance, for example. This prevents the long-term performance of the SHS from being evaluated. In addition, the individual countries in SSA are extremely diverse. The differences can be found in various areas, such as income, energy requirements, and PV yield. This means that an SHS that works well and is accepted in one country will not necessarily be successful everywhere. This paper focused mainly on data from South Africa but also conducted literature research for other countries in SSA. The most important limitation is that it is an LVDC system and can therefore only cover basic energy needs. The system is not designed to supply appliances such as refrigerators, hotplates, or air conditioners with electricity, which makes it not suitable to complete more advanced household supply.

F. Future Work

To develop a successful product in the long term, there are several necessary next steps. The field-testing phase must be extended to obtain reliable information on energy consumption, user behavior, system reliability, and battery

life. In addition, as many devices as possible should be distributed to see how well the SHS works in different household sizes and where potential problem areas are. An interesting system implementation would be a monitoring device. This would allow for a more detailed examination of PV yield, daily energy consumption, battery charge cycles, and load profiles, enabling more accurate assumptions to be made. This would help to improve the dimensioning of future systems. In addition, the prototype should be optimized to make it suitable for mass production, and ways to save further costs should be investigated to make the SHS more cost-effective. It is also important to train users so that they develop the skills to maintain the SHS, which enables a longer service life.

VI. Conclusion

Due to the high level of energy poverty in SSA, mainly in rural and informal settlements, the aim of this work was to develop a cost-effective SHS prototype that is optimally tailored to user needs. The results show that a scalable LVDC system with durable components and a modular design meets these needs. The system aims to grow with the user and their energy needs, to be able to power all important devices, and ultimately to be owned by the users.

This SHS gives residents in rural and informal settlements access to electricity and makes them less dependent on the expansion of electricity grids. Electrification not only enables users to engage in economic activities, thus increasing their income and wealth, but also accessing education, information and communication more easily, what overall enhances the quality of life.

References

[1] IEA (2024), SDG7: Data and Projections, IEA, Paris https://www.iea.org/reports/sdg7-data-and-projections, Licence: CC BY 4.0

[2] "Energy Access Has Improved, Yet International Financial Support Still Needed to Boost Progress and Address Disparities," World Bank. Accessed: Jan. 29, 2026. [Online]. Available: https://www.worldbank.org/en/news/press-release/2025/06/25/energy-access-has-improved-yet-international-financial-support-still-needed-to-boost-progress-and-address-disparities

[3] K. Han, "Still lacking reliable electricity from the grid, many Africans turn to other sources".

[4] amoore, "What is Energy Poverty and How Does It Impact Communities Worldwide?," Population Education. Accessed: Jan. 29, 2026. [Online]. Available: https://populationeducation.org/what-is-energy-poverty-and-how-does-it-impact-communities-worldwide/

[5] M. Petersen, "What are Solar Home Systems?," World Future Council. Accessed: Jan. 29, 2026. [Online]. Available: https://www.worldfuturecouncil.org/what-are-solar-home-systems/

[6] R. Dumitrescu, S. Groh, N. Tetteh, S. Islam, and S. Ahmed, "Swarm electrification at scale: An innovative partnership model for sustainable energy development in Bangladesh," *Natural Resources Forum*, vol. 47, no. 4, pp. 842–857, 2023, doi: 10.1111/1477-8947.12359.

[7] "World Bank Open Data," World Bank Open Data. Accessed: Feb. 11, 2026. [Online]. Available: https://data.worldbank.org/topic/poverty

[8] "World Bank Open Data," World Bank Open Data. Accessed: Feb. 11, 2026. [Online]. Available:https://data.worldbank.org/indicator/NY.GNP.PCAP.CD?locations=ZG

[9] "Africa Poverty: ZipDo Education Reports 2026," ZipDo. Accessed: Feb. 11, 2026. [Online]. Available: https://zipdo.co/africa-poverty-statistics/

[10] "World Bank Open Data," World Bank Open Data. Accessed: Feb. 11, 2026. [Online]. Available:https://data.worldbank.org/indicator/SP.RUR.TOTL.ZS?locations=ZG

[11] United Nations, Department of Economic and Social Affairs, Population Division (2019). Patterns and trends in household size and composition: Evidence from a United Nations dataset. (ST/ESA/SER.A/433).

[12] L. T. Fillol *et al.*, "Understanding the Drivers of Appliance Adoption Over Time: Evidence from Rural Kenya," in *2023 IEEE PES/IAS PowerAfrica*, Marrakech, Morocco: IEEE, Nov. 2023, pp. 1–5. doi: 10.1109/PowerAfrica57932.2023.10363282.

[13] ESMAP. 2020. Global Photovoltaic Power Potential by Country. Washington, DC: World Bank.

[14] R. J. Vermaak, B. S. Mercuur, M. Roopa, M. Mangaroo-Pillay, and C. A. Steed, "Designing a Low-Cost Photovoltaic Prototype for Informal and Rural Settlements," in *2025 IEEE International Conference on Engineering, Technology, and Innovation (ICE/ITMC)*, Valencia, Spain: IEEE, Jun. 2025, pp. 1–9. doi: 10.1109/ICE/ITMC65658.2025.11106576.

[15] "Overcoming Challenges of Providing Solar Energy to Rural Communities." Accessed: Mar. 02, 2026. [Online]. Available: https://www.linkedin.com/pulse/overcoming-challenges-providing-solar-energy-rural-communities

[16] "USB Type C Market | Global Market Analysis Report - 2035." Accessed: Mar. 04, 2026. [Online]. Available: https://www.futuremarketinsights.com/reports/usb-type-c-market

[17] E. S. Wallach *et al.*, "Effect of a solar lighting intervention on fuel-based lighting use and exposure to household air pollution in rural Uganda: A randomized controlled trial," *Indoor Air*, vol. 32, no. 2, Feb. 2022, doi: 10.1111/ina.12986.

[18] Vecteezy.com (picture)

[19] I. Graessler, J. Hentze, and T. Bruckmann, "V-MODELS FOR INTERDISCIPLINARY SYSTEMS ENGINEERING," presented at the 15th International Design Conference, 2018, pp. 747–756. doi: 10.21278/idc.2018.0333.

[20] R. Razzouk and V. Shute, "What Is Design Thinking and Why Is It Important?," *Review of Educational Research*, vol. 82, no. 3, pp. 330–348, Sep. 2012, doi: 10.3102/0034654312457429.

[21] "What Is Design Thinking & Why Is It Important? | HBS Online," Harvard Business School. Accessed: Mar. 18, 2026. [Online]. Available: https://online.hbs.edu/blog/post/what-is-design-thinking

[22] J. Henning, *Photovoltaics for the technically ungifted: academics with two left hands and everybody else*. BoD – Books on Demand, 2014.

[23] S. Dawn, K. N. Das, R. Mallipeddi, and D. P. Acharjya, Eds., *Smart and Intelligent Systems: Proceedings of SIS 2021*, 1st ed. 2022. in Algorithms for Intelligent Systems. Singapore: Springer Singapore, 2022. doi: 10.1007/978-981-16-2109-3.

[24] A. Aktaş and Y. Kirçiçek, *Solar hybrid systems: design and application*. London [England] ; San Diego, CA: Academic Press, 2021.

[25] Y. Liu, H. Xiao, X. Lei, Y. Qudaih, and X. Zhang, Eds., *Planning, operation and control of modern power system with large-scale renewable energy generations*. in Frontiers Research Topics. Frontiers Media SA, 2023. doi: 10.3389/978-2-8325-3225-6.

[26] R. Belu, *Fundamentals and source characteristics of renewable energy systems*. in Nano and Energy Series. Milton Boca Raton London New York: CRC Press, 2020.

[27] X. Wang, P. Adelmann, and T. Reindl, "Use of LiFePO4 Batteries in Stand-Alone Solar System," *Energy Procedia*, vol. 25, pp. 135–140, 2012, doi: 10.1016/j.egypro.2012.07.018.

[28] M. F. Benlamnouar, Y. Laib Dit Laksir, T. Saadi, N. Bensaid, and R. Badji, "Modeling and optimization of mechanical characteristics of additively manufactured ABS sandwich structure by using response surface methodology," in *2024 6th International Conference on Pattern Analysis and Intelligent Systems (PAIS)*, EL OUED, Algeria: IEEE, Apr. 2024, pp. 1–8. doi: 10.1109/PAIS62114.2024.10541153.

[29] A. T. Gashaye, H. Long, and J. Li, "Electrifying rural Ethiopia: Boosting nonfarm enterprises and income through household electricity access," *Energy Policy*, vol. 209, p. 114992, Feb. 2026, doi: 10.1016/j.enpol.2025.114992.

[30] K. G. Magbondé, B. Reilly, and B. Kauma, "The distributional effects of rural electrification on household welfare: Evidence from Senegal," *Utilities Policy*, vol. 91, p. 101846, Dec. 2024, doi: 10.1016/j.jup.2024.101846.

[31] IRENA (2024), "Sub-Saharan Africa: Policies and finance for renewable energy deployment".

[32] "World Bank Informality Study," World Bank. Accessed: Mar. 20, 2026. [Online]. Available: https://www.worldbank.org/en/news/press-release/2021/05/11/widespread-informality-likely-to-slow-recovery-from-covid-19-in-developing-economies

[33] C. Rastogi, "M-Kopa Solar: Lighting up the Dark Continent," *South Asian Journal of Business and Management Cases*, vol. 7, no. 2, pp. 93–103, Dec. 2018, doi: 10.1177/2277977918774648.

[34] "How Kenya's M-Kopa Brings Prepaid Solar Power To Rural Africa." Accessed: Mar. 21, 2026. [Online]. Available: https://www.forbes.com/sites/tobyshapshak/2016/01/28/how-kenyas-m-kopa-brings-prepaid-solar-power-to-rural-africa/.

[35] Wlokas, H. L. (2010). *A review of the solar home system concession programme in South Africa* University of Cape Town ,Faculty of Engineering & the Built Environment ,Energy Research Centre. Retrieved from http://hdl.handle.net/11427/16591.